NOTE :
ALL RIGHTS RESERVED. THIS DRAWING OR ANY PART THEREOF MUST NOT BE REPRODUCED IN ANY FORM WITHOUT THE WRITTEN PERMISSION OF HIGHLAND TANK.
HIGHLAND TANK SHALL BE RESPONSIBLE ONLY FOR ITEMS INDICATED ON THIS FABRICATION DRAWING UNLESS OTHERWISE NOTED. CUSTOMER IS RESPONSIBLE FOR VERIFYING CORRECTNESS OF SIZE / LOCATION OF FITTINGS , ACCESSORIES & COATINGS SHOWN ON THIS DRAWING

FITTING SCHEDULE

A= 3" ø NPT WITH 3" x 2" NYLON BUSHING
B= 3" ø NPT WITH 3" x 4" NYLON BUSHING
C= 3" ø NPT WITH 3" x 2" NYLON BUSHING
(FITTING FOR LEAK DETECTION W/ INTERNAL PIPE)

GENERAL NOTES

CAPACITY : 1000 GALLONS
TYPE : 1 38D DOUBLE WALL, UNDERGROUND, NY CITY
NO. REQ. :
MATERIAL : MILD CARBON STEEL
TEST : 30 P.S.I. INNER 5 P.S.I. OUTER
MIN. GAUGE OR THICKNESS (PER U.L. 58) :
(BASED ON 60" MAX. BURIAL DEPTH)
INNER HEADS : 5/16" OUTER HEADS : 10 GA.
INNER SHELL : 1/4" OUTER SHELL : 10 GA.
PAINT :
INTERIOR : NONE
EXTERIOR : SP-6 BLAST, COAT WITH :
- ☐ CORROCOTE PLUS 15 MILS
- ☐ POLYURETHANE 70 MILS
- ☐ FIBERGLASS REINFORCED POLYESTOR 125 MILS

CONSTRUCTION : FLANGED & DISHED HEADS, LAP WELD ALL EXTERIOR SEAMS ONLY
APPROVED LABELS : U.L. 58, NYC, NYCRR PART 614
- ☐ S.T.I.P.3
- ☐ ACT-100-U
- ☐ ACT-100

- 18000 VOLT SPARK TEST PROVIDED AT FACTORY FOR POLYURETHANE MODELS
- 35000 VOLT SPARK TEST PROVIDED AT FACTORY FOR F.R.P. MODELS

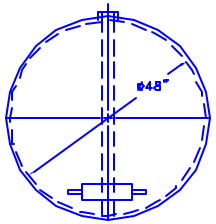

END VIEW

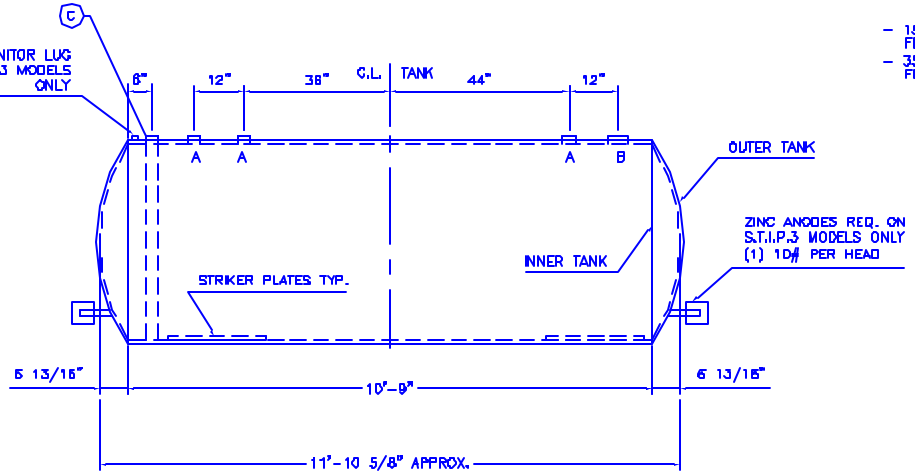

ELEVATION

AREO-POWER
UNITIZED FUELER, INC.
103 SMITHTOWN BLVD
SMITHTOWN, NY 11787

DRAWING TITLE

NEW YORK CITY
1000 GAL U/G
TYPE 1 DW

REV	DATE	BY	REVISION DESCRIPTION

ALL RIGHTS RESERVED. THIS DRAWING OR ANY PART THEREOF MUST NOT BE REPRODUCED IN ANY FORM WITHOUT WRITTEN PERMISSION OF AREO-POWER UNITIZED FUELER, INC.

DWG NO: K DWI NYCUG48	
SCALE: 3/8"=1"	DWN BY: HT
SHEET: 1	DATE: 11/1/02