GENERAL SPECIFICATIONS

NO. REQ.: ONE
MODEL: AREO-15 ABOVEGROUND 200 GALLONS OIL WATER SEPERATOR
TEST: AIR 2 PSI (AT HT FACTORY)
GALLONS PER MINUTE: 10
GAUGE: 7 GA.
TANK WEIGHT: 975 LBS.(APPROX.)
SURFACE PREP.: S.S.P.C. NO. 6 BLAST ALL EXTERIOR SURFACES
S.S.P.C. NO. 10 BLAST ALL INTERIOR SURFACES
EXTERIOR COATING: EPOXY PRIMER & URETHANE TOPCOAT (WHITE) 3 MILS
INTERIOR COATING: CORROCOTE PW (10-15 MILS)
CONSTRUCTION: BUTT FIT AND WELD INSIDE AND OUTSIDE SEAMS

NOTES:
1. ALL INTERNAL MATERIAL IS 10 GA
2. ALL FITTINGS MUST BE SHIPPED W/ STEEL PLUGS INSTALLED
3. LIFTING LUGS DO NOT HAVE RE-INFORCING PLATES. LUGS PLACED APPROX. 6" FROM TOP - 4 REQUIRED ON TANK.
4. ONE LID COVER W/ SIX (6) WING-NUTS

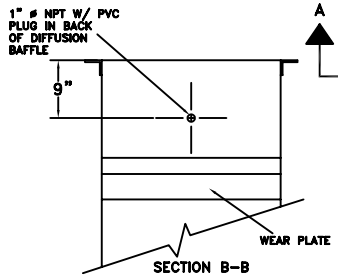

SECTION B-B

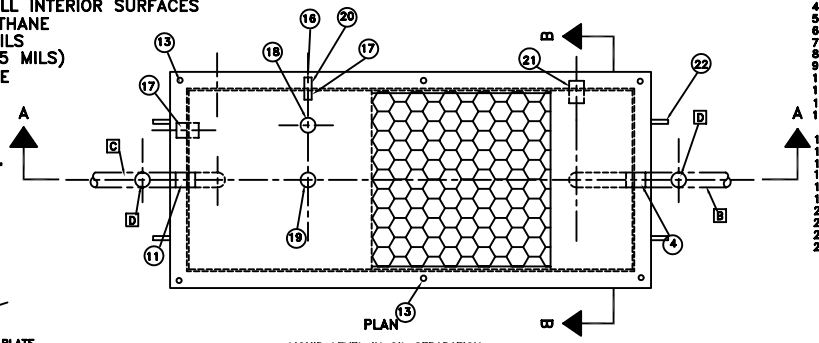

PLAN

STANDARD EQUIPMENT

1. OIL WATER SEPARATOR
2. SEDIMENT CHAMBER
3. OIL WATER SEPARATION CHAMBER
4. 2" ø THREADED INLET
5. 2" ø PVC INLET ELBOW PIPING
6. VELOCITY HEAD DIFFUSION BAFFLE(SEE SECTION B-B)-10 GA
7. WEAR PLATE (1/4" THICK)
8. REMOVABLE CROSS-FLOW PACK (2 PACKS REQUIRED)
9. SLUDGE BAFFLE (10 GA)
10. 2" ø PVC OUTLET DOWN COMER PIPE
11. 2" ø THREADED OUTLET
12. (1)PIECE COVER (10 GA)
13. NUT & BOLTS W/ LARGE WING NUTS(TYP.) (CORROSION RESISTANT)
14. GASKET MATERIAL (FOR EACH REMOVABLE COVER)
15. 2" ø N.P.T. (CLEAN OUT)
16. 2" ø N.P.T. (VENT)
17. 1"ø (DRAIN) W/ STEEL PLUG
18. 2" ø FULL COUPLING (FITTING FOR OIL PUMP-OUT)
19. 2" ø HALF COUPLING (FITTING FOR LEVEL SENSORS)
20. 3" ø FULL COUPLING (FITTING FOR SKIMMER)
21. 2"ø NPT (SLUDGE DRAIN) W/ STEEL PLUG
22. LIFTING LUGS 6"WIDE
23. 3"X3"X1/4" FLAT W/ 1/2"ø HOLE DRILLED IN CENTER (GROUNDING LUG)

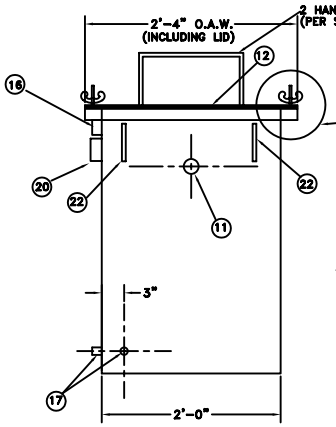

END VIEW

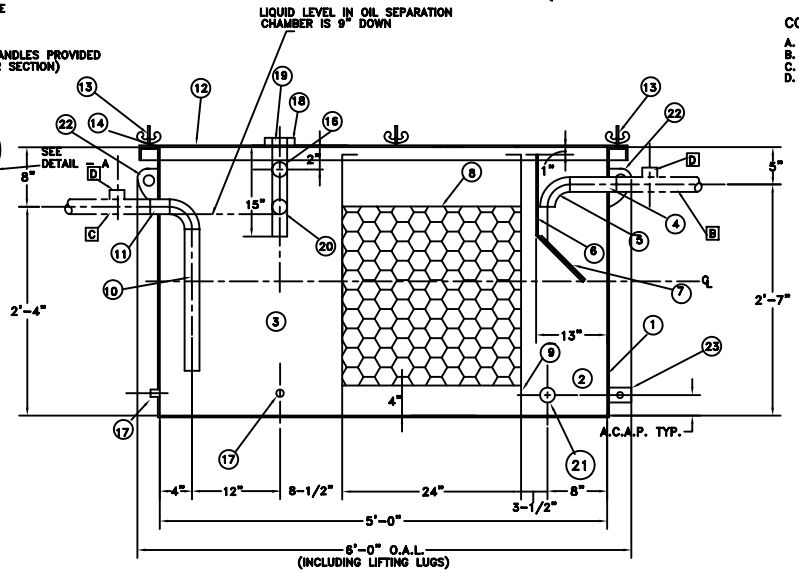

SECTION A-A

CONTRACTOR FURNISHED EQUIPMENT

A. 2" ø VENT PIPING-NOT SHOWN
B. INLET PIPING AND FITTINGS
C. OUTLET PIPING AND FITTINGS
D. 2"ø TEE (VENT

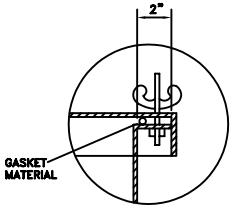

DETAIL - A
(LIP-OUT DESIGN)

OTHER OPTIONS AVAILABLE

- ☐ UPGRADE TO DOUBLE WALL TANK
- ☐ 10 PPM PERFORMANCE (IN LIEU OF 15 PPM).
- ☐ ADD SLUDGE HOPPER

AREO-POWER
UNITIZED FUELER,INC.
103 SMITHTOWN BLVD
SMITHTOWN, NY 11787

DRAWING TITLE

AREO-POWER 200 GAL
ABOVEGROUND SINGLE WALL RECTANGULAR OIL-WATER SEPARATOR

REV	DATE	BY	REVISION DESCRIPTION

CONSTRUCTION APPROVAL

PRINT NAME

SIGNATURE

DATE

ALL RIGHTS RESERVED. THIS DRAWING OR ANY PART THEREOF MUST NOT BE REPRODUCED IN ANY FORM WITHOUT WRITTEN PERMISSION OF AREO-POWER UNITIZED FUELER, INC.

DWG NO: 971210B	
SCALE: NTS	DWN BY: HT
SHEET: 1 OF 1	DATE: 1/6/97