SHIP LOOSE

(2) 6" MALE THREADED EMERGENCY VENTS

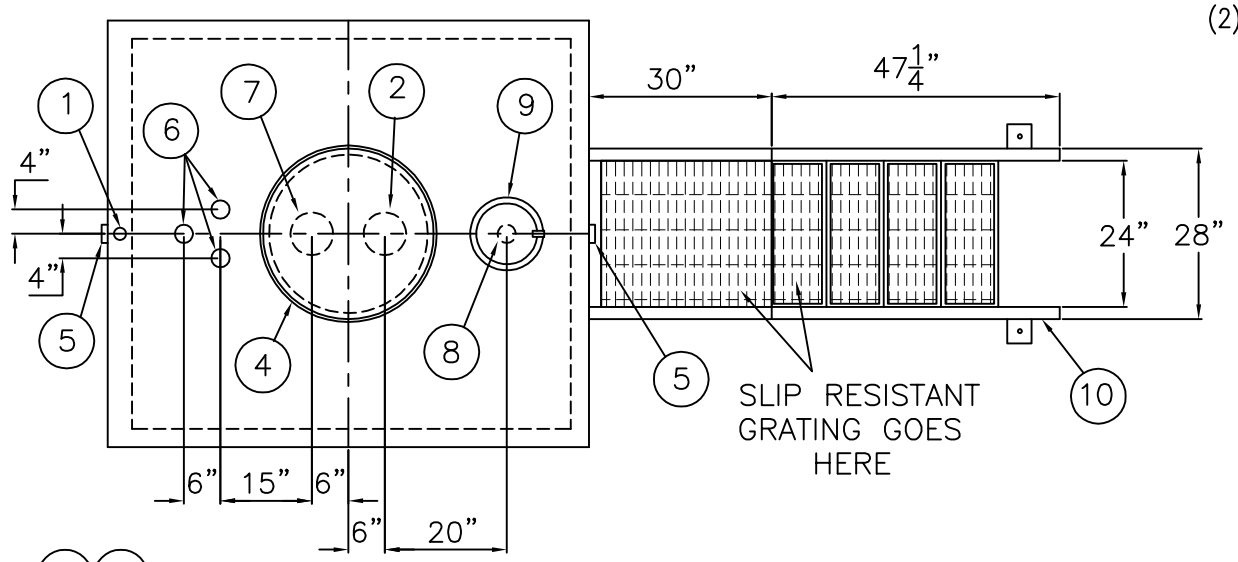

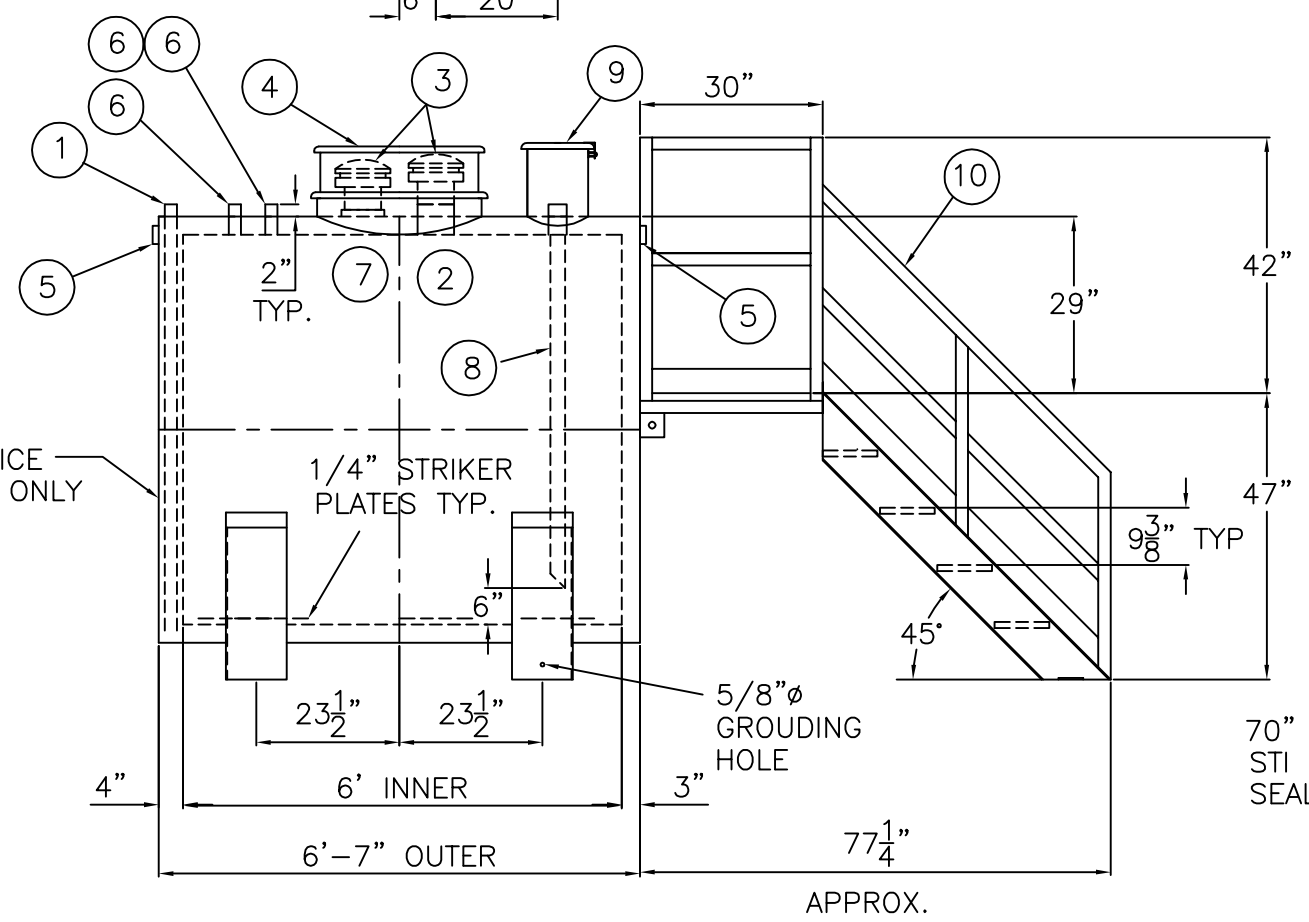

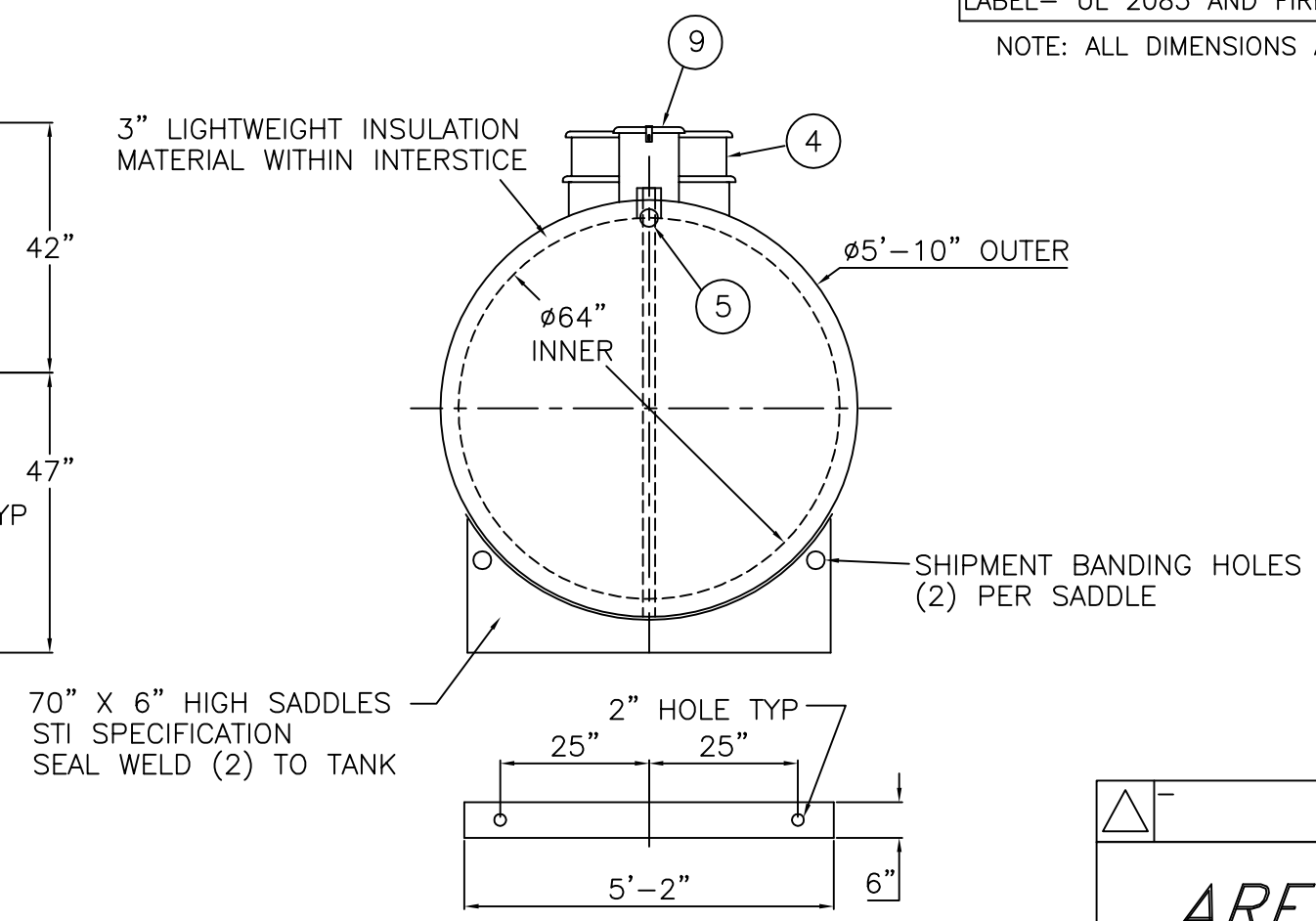

NOTE: ALL RIGHTS RESERVED. THIS DRAWING MUST NOT BE REPRODUCED IN ANY FORM WITHOUT THE WRITTEN PERMISSION OF AREO-POWER®. AREO-POWER® SHALL BE RESPONSIBLE ONLY FOR ITEMS INDICATED ON THIS FABRICATION DRAWING UNLESS OTHERWISE NOTED. CUSTOMER IS RESPONSIBLE FOR VERIFYING CORRECTNESS OF SIZE AND LOCATION OF FITTINGS, ACCESSORIES, AND COATINGS SHOWN ON THIS DRAWING.

TOUCH UP OF FINISHED PAINT IS REQUIRED BY INSTALLATION CONTRACTOR. TOUCH UP PAINT SHIPPED WITH TANK.

DESIGN DATA

CAPACITY : 1,000 GALLONS
TYPE: FIREGUARD® CYLINDRICAL
FIREGUARD® IS A TRADEMARK OF WITH THE STEEL TANK INSTITUTE
NO. REQ. – –
OPERATING PRESSURE – ATMOSPHERIC
TANK MATERIAL – MILD CARBON STEEL
THICKNESS – INNER – HEADS AND SHELL – 7 GAUGE THICKNESS – OUTER – HEADS AND SHELL – 7 GAUGE MIN. GAUGE OR THICKNESS (PER U.L. 2085)
CONSTRUCTION – INNER – LAP WELD OUTSIDE ONLY CONSTRUCTION – OUTER – LAP WELD OUTSIDE ONLY
TANK TEST – PER UL 2085
INT. FINISH – NONE
EXT. FINISH – SP-6 BLAST, FINISH PAINT WHITE
LABEL– UL 2085 AND FIREGUARD® PER sti

NOTE: ALL DIMENSIONS APPROXIMATE

ITEM	QTY	DESCRIPTION
1	1	2" INTERSTITIAL MONITOR PIPE – MALE NPT END
2	1	6" FEMALE FIREGUARD COUPLING – FOR PRIMARY EMERGENCY VENT USE
3	2	6" EMERGENCY VENT
4	1	VENT DEFLECTOR ASSEMBLY
5	2	2" FITTING TUROUGH OUTER SHELL ONLY WITH CAST IRON PLUG– MFG USE ONLY
6	3	2" FEMALE FIREGUARD COUPLING
7	1	6" FITTING THROUGH OUTER SHELL ONLY, MARK WITH SPECIAL WARNING LABEL INTERSTITIAL EMERGENCY VENT USE ONLY
8	1	2" FEMALE FIREGUARD COUPLING w/ 2" DROP PIPE TO WITHIN 6" OF THE BOTTOM OF THE TANK WITH 45° MITER
9	1	FILL CONTAINMENT CHAMBER
10	1	STAIRS, PLATFORM AND HAND RAILS
11	–	–
12	–	–

AREO-POWER®

U.S. PATENT # 4895272 CANADIAN PATENT APPLIED FOR

1,000 GAL 64"ø CYL. FIREGUARD®

PATENT: 5,695,089 PATENT: 5,809,650

CUSTOMER:

PROJECT:

QUOTE NO:

CHK'D BY:

SCALE: 3/8" = 12"

DATE:

DWG. BY:

DWG. NO.: AP1000FG64CYL